Metal Earth®

3D METAL MODEL KITS

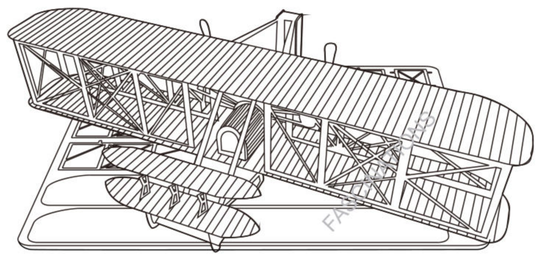

Wright Brothers Plane

Item No. MMS042

360° view

It is highly recommended that you visit
www.metalearth.com/360/mms042
to see the completed model before assembling your own

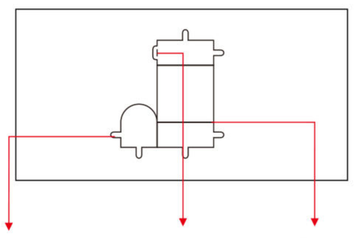

Legends:

- E — Engraved side
- NE — Non-engraved side
- Attention point
- Insert tab and bend 90 degrees
- Insert tab and twist 90 degrees

Assembly tip:

If needed, slightly twist tabs to hold parts together then untwist and bend them down for a nice finish

Recommended tools:

-Wire cutters: helpful for taking parts from the metal sheets.

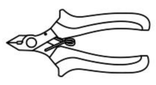

-Tweezers or needle nose pliers: helpful for folding parts, bending and twisting tabs.

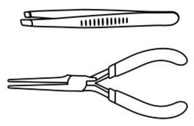

Metal sheet

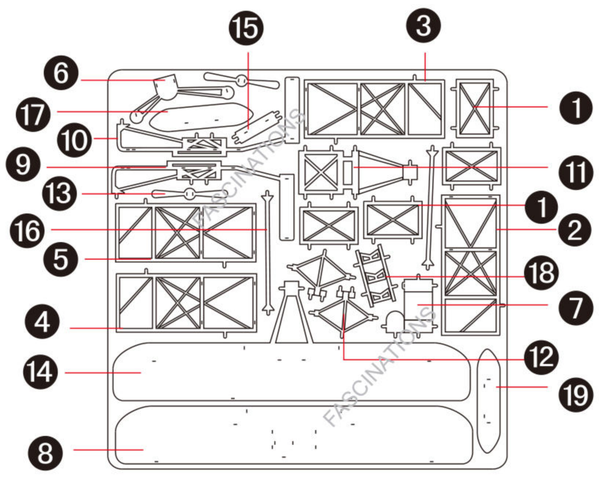

In order to avoid possible injury from sharp edges, please carefully discard the metal sheet after parts have been removed

Assembly Flow Chart

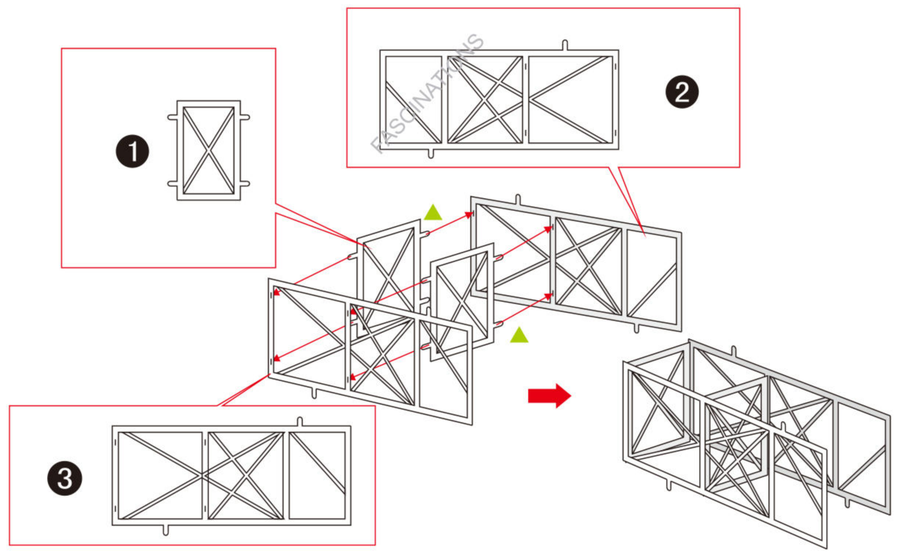

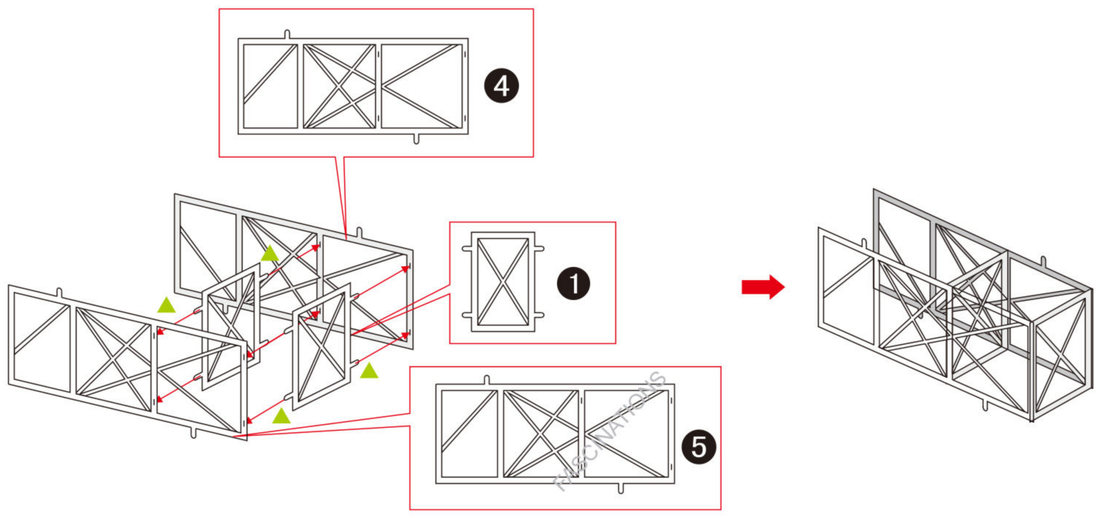

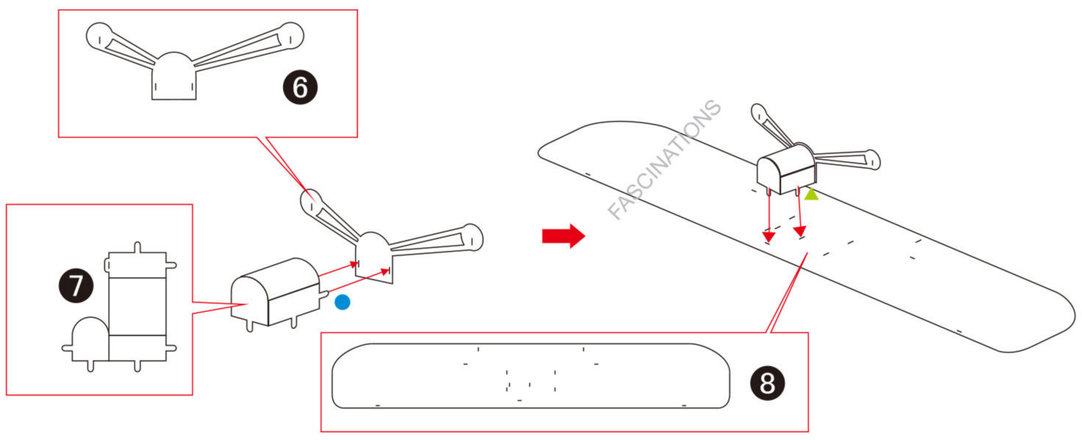

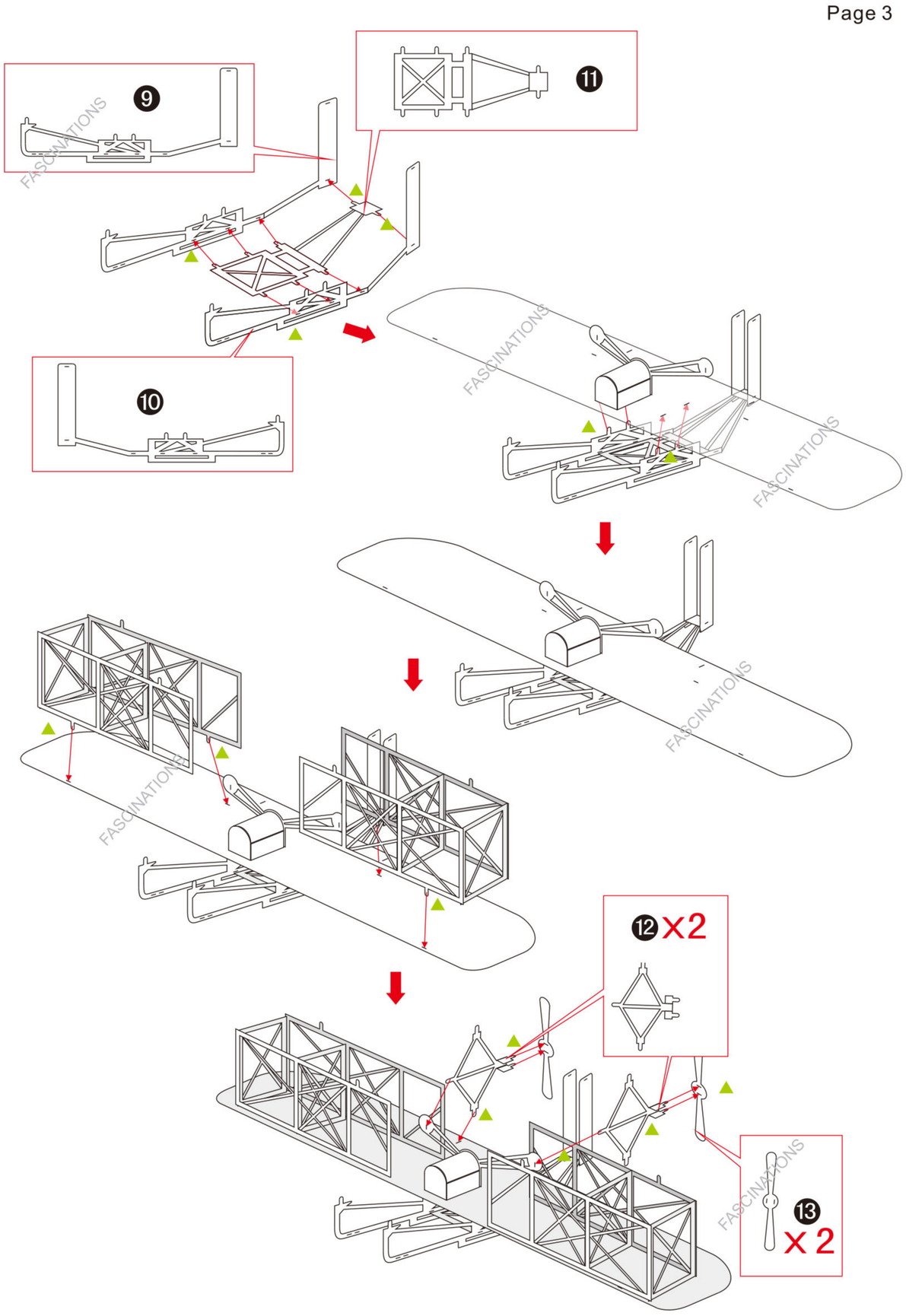

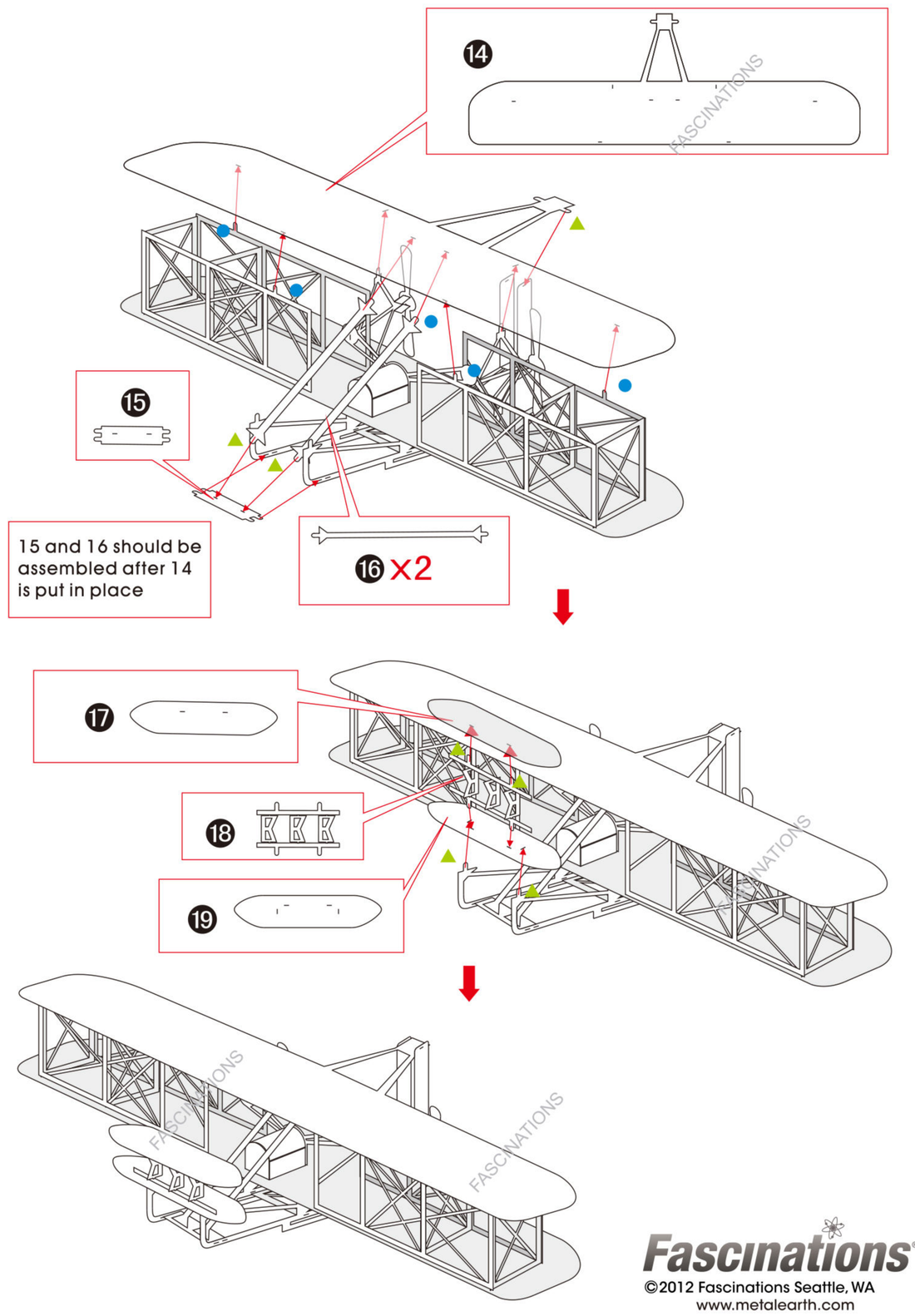

15 and 16 should be assembled after 14 is put in place

Fascinations®

©2012 Fascinations Seattle, WA
www.metalearth.com